Gram Sevak

ISSUED BY THE MINISTRY OF COMMUNITY DEVELOPMENT

OFFICE OF THE PRINCIPAL
29 DEC 1958

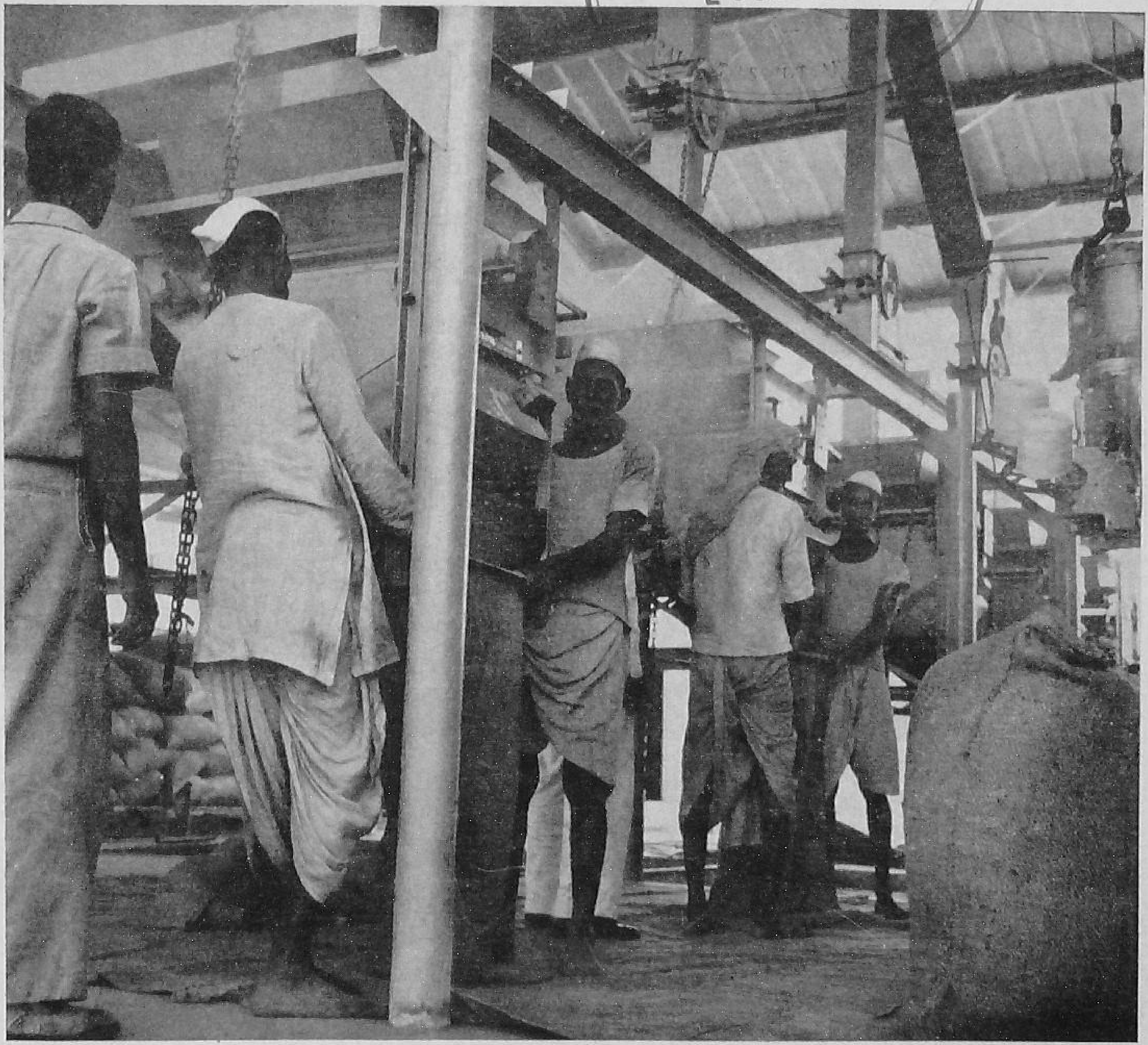

Machine do the job for man—Gunny bags are being filled in mechanically with grain in the Silo-cum-Elevator at Hapur.

VOL. V. NO. 4 NOVEMBER 1958 PRICE 15 NP

A general view of the heavy industries section of the India 1958 Exhibition which was opened by the Prime Minister on 8th October, 1958 at Mathura Road in New Delhi

29 DEC 1958

मज़दूर मंज़िल
ग्राम सेवक

GRAM SEVAK

Kartika-Agrahayana 1880
Vol. 5 November 1958 No. 4

CONTENTS

Child Welfare Work in Punjab .. 1
Children's Museums in Rajasthan 3
President's Awards 5
The Story of the Wheat Grain —*U. N. Chatterjee* .. 8
Brick Manufacture in India —*G. C. Mathur* 9
Green Manuring Practices .. 14
Fuel Resources in India .. 16
Suratgarh Farm 17
Soil Conservation in Orissa —*Prafulla Chandra Mahanty* 19
Co-operative Supervisor .. 21

Editor : D. Raghavan
Asstt. Editor : M. K. Rao

BUSINESS NOTICE

Single Copy : 15 n.P.
Annual : Rs. 1.25

All enquiries regarding agency and rates of subscription and advertisements may be addressed to the Publications Division, Old Secretariat, Delhi-8. Editorial correspondence may be addressed to the Editor, *Gram Sevak*, Ministry of Community Development, New Delhi.

CHILD WELFARE WORK IN PUNJAB

Sickness and suffering anywhere and everywhere demand general attention. The sight of disease-ridden destitute and disabled children is perhaps, the most pathetic. The child's grief afflicts its little heart as deeply as the man's sorrow and calls for spontaneous sympathy and help.

A country that has set before itself the ideal of a Welfare State cannot afford to ignore its younger generation, especially those less fortunate among them who live under the shadow of want and poverty or are suffering from physical disability of one sort or another. It is only on the foundation of general well-being that the super-structure of a strong and stable nation can be raised.

Since the advent of freedom child welfare work has been taken up in right earnest. The Punjab State Council for Child Welfare would have completed six years of useful work on 3rd November, 1958. The Council has been largely responsible for initiating, undertaking and aiding directly or indirectly through its branches various schemes for the furtherance of child welfare in the State. Branches have been set up in all the districts except in Sangrur and Mohindergarh. Efforts are being made to set up branches in these two districts as well. There is an independent unit of child welfare activities at Nangal.

Founding of Homes, orphanages, creches, infant health centres, cultural and recreational centres and children's libraries are among the main activities of the State Child Welfare Council. One hundred and fifty-seven play centres, thirty-three children's libraries, ten centres for children of working women, six children's clubs, six milk centres and six pre-primary schools have been set up by the Council so far in different parts of the State.

The Maternity and Child Welfare Centres working under agencies of the State Red Cross Society provide help and guidance to the expectant mothers and give training to the illiterate women folk in child care.

THE HANDICAPPED

Keeping in view the welfare of the handicapped children the State Council for Child Welfare has set up a Home at Chandi Mandir where the orthopaedically handicapped children are given medical treatment and taught different vocations, so that they may get rehabilitated in society. The Home is run on the lines of a hospital school. A child is primarily admitted for treatment of various physical deformities like congenital clubfoot, nerve injury, bone tumours etc. So far a total number of fifty-one patients have been admitted to the Home out of which sixteen have been dis-

charged partially or completely cured.

THE BLIND

In order to provide facilities to the blind children a well-equipped institute has been set up at Panipat. The institution has scope to provide for hundred children of school-going age but the work, to begin with, has been started with forty-five children and the number will be increased gradually. Besides imparting education in the three R's, an elementary knowledge in geography, lessons in Hindi and Punjabi and training in vocations and crafts like 'chik' making, cane work, charpoy making, newar making and durry weaving etc., have been introduced. The beneficiaries are provided free boarding and lodging besides being allowed to stay on in the institution till such time as they become self-supporting.

A model Home has been set up at Madhuban in Karnal district to cater to the needs of orphaned and destitute children. Unlike the existing orphanages, this Home aims at providing educational, recreational and vocational facilities including aftercare services to at least 300 children to equip themselves psychologically and otherwise till they can earn their own livelihood. Over 100 children have already been admitted. The Home has a modern well-equipped school, while vocational and agricultural centres are being set up by the Industries and Agriculture Departments. The Project is estimated to cost Rs 10 lacs during the plan period out of which the State Government is contributing Rs. 4 lacs while the balance is proposed to be raised from philanthropists through an appeal which has already been issued by the Chief Minister, Punjab, and which has met with a good initial response.

HOLIDAY CAMPS

The holiday camp idea has by now assumed the form of a movement. It was first mooted by Shrimati Indira Gandhi some four years ago and the first camp to be set up at Tara Devi was named after her. A number of camps, some for boys and some exclusively for girls, have since been organised at the Tara Devi Home and elsewhere. Children from schools as well as non-student youth from villages and cities and Harijan children are brought to these camps and given the advantage of a disciplined life in a holiday spirit for a number of days in an atmosphere where children from different classes and areas mix freely with one another.

A provision of Rs. 3.10 lacs exists for these camps under the Second Plan.

Vinobaji on Children

Mother, father, teacher, saint—see the Lord in them. If, in the same way, we learn to see the Lord in little children, how we should rejoice! Dhruva, Prahlada, Nachiketa, Sanaka, Sanandana, Sanatkumara—were they not all children? But the authors of the Puranas, Vyasa and the rest, did not know where to place them, what to do with them. Sukadeva and Sankaracharya were free of desire even from childhood. And so too was Jnanadev. All of them were children! But nowhere is the Lord manifest in such clear pure form as in these children. Lord Jesus loved children dearly. Once His disciples asked Him, "You speak so much about the Kingdom of God. Who can enter it?" He lifted up a child standing by and set him on a table and said, "Of such is the Kingdom of God. To enter therein, one must become as a little child." What Jesus said is true. Swami Ramdas was once playing with children. Some grown up people who observed Samarth, the saint romping with the children, were surprised. One of them asked, 'What has come over you to-day?" Samarth answered

"Those who remained young became great,
Those who grew up became great rogues."

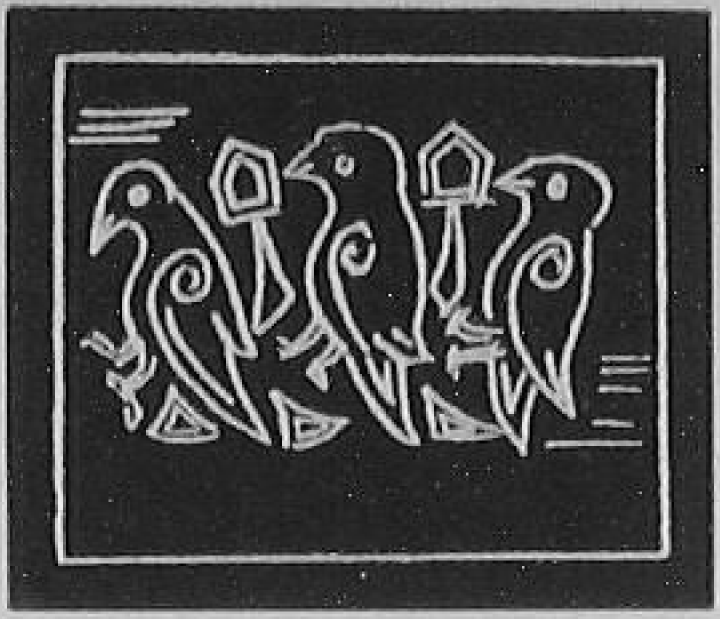

CHILDREN'S MUSEUMS IN RAJASTHAN

THE CHILDREN of Rajasthan have the privilege of possessing three museums, the first of their kind in the country, to entertain, amuse and educate themselves by exhibits which appeal to their active inquisitiveness and motivate learning.

One of these museums was inaugurated on October 17 by their dear "CHACHA NEHRU" at Naya Sanwara, a model village in the Pindwara development block in Sirohi district. The Prime Minister, while motoring down to Abu from Sirohi, was apparently interested in this dreamland of the children where he spent a few minutes and agreed to its naming after the late Mrs. Kamla Nehru. The second museum at Sanganer, headquarters of another C.D. Block, 8 miles from Jaipur, is now an year old and provides a great attraction to both rural and urban children and the stream of visitors and tourists to the famous Jain temple of Sanganer. The third one, at Abu, has also been attracting children for the last six months.

The scheme of these museums was initiated by Shri P. G. Mehta, an eminent industrialist, and the Development Department was quick enough to take up the idea which had great potentialities of broadening the mental horizon of the citizens in the making by educational entertainment. Also it could serve the uneducated adult populace of the countryside which because of their low level of general knowledge, can very well be equated with children.

The exhibits displayed at the museums serve this double purpose. Stuffed birds in two categories as friends and foes of the farmer, specimens of various insects with their life stories, a couple of bee-hives in glass exhibition cases for showing to the children the results of the community working are among the exhibits. Nests of some of the wonderful birds in our forest areas as also trunk of trees which may indicate age thereof, history of the silkworm and some specimen from a colourful aquarium also attract the child.

Among the many attractions in this dreamland, is a Planetarium. It is a remarkable device by which the mystery and splendour of the night sky is brought indoors and projected on a darkened dome or ceiling. Never has a means of entertainment been provided which is so instructive, so fascinating and appealing to the young mind. One remarkable thing about this exhibit is its cost, which is only a rupee.

A Universal Sundial and and miniature models of Maharaja Jaisingh's observatory further make the child friendly with natural phenomena in the simplest way.

Children are always pet-happy and bird-crazy. The most playful of our feathered birds like parakets or love-birds create increasing interest and a couple of rabbits put the children in direct touch with nature. An aquarium with multi-coloured fishes is also fascinating.

There will be a galaxy of wonderful plumage of birds so vividly colourful and varied. Insects, moths and butterflies are plentifully available in nature and wonderful varieties of colours displayed by them is a source of great attractions. Similarly life story of silk worm—from eggs to full growth and also process of spinning and weaving of silk, and a few other

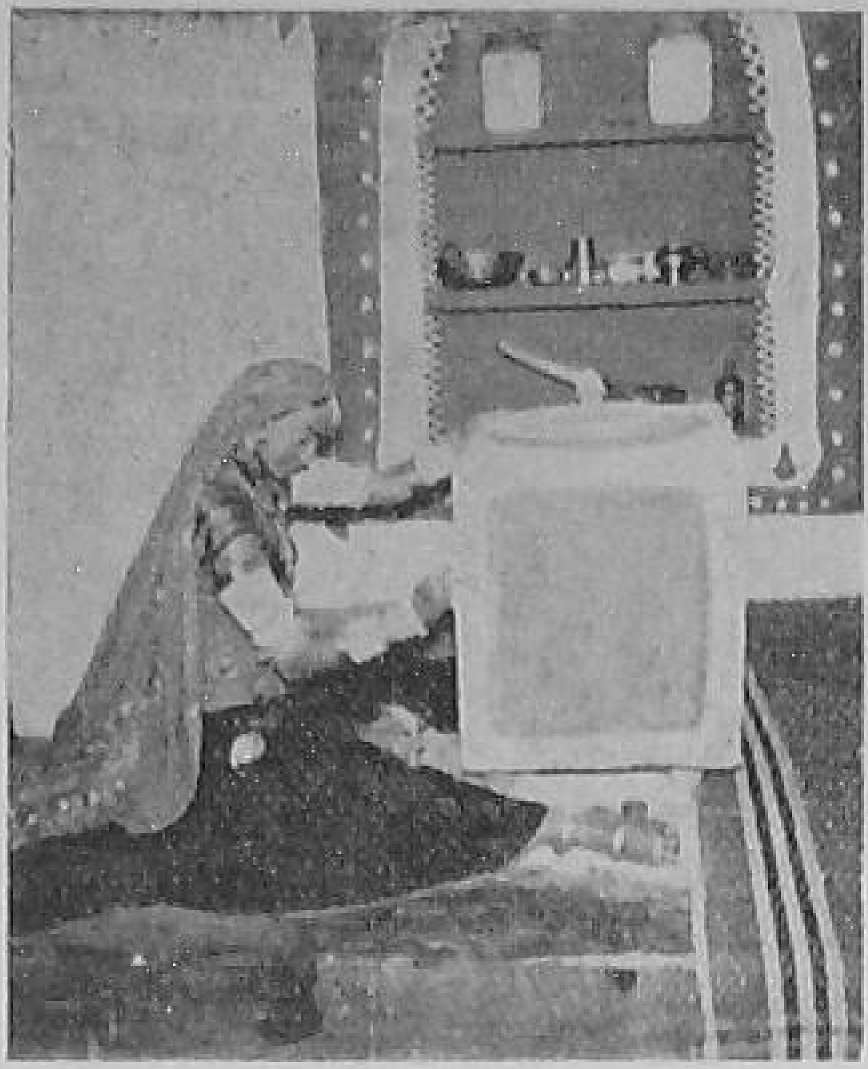

A model of cottage industry in the museum

life stories of a mosquito, a honey-bee, a frog, etc., have been displayed.

In the 'Mother India Gallery' it is amazing and interesting for the children to know through their respective dolls and recognise a Madrasi, Maharashtriyan, Punjabi or Kashmiri lady and gentleman in their distinctive robes, styles and features.

Folk art, folk dance, festivals, customs, architectural styles, languages and dialects of all the fourteen States with their maps, models and charts are depicted here—every-thing confirming unity in diversity. A comparative idea of the area of each state, the population and the literacy percentage is given in understandable style. There are pictures of our common popular Bhaktas, Leaders and Patriots; of Holy Rivers carrying and spreading culture of Oneness, of present united efforts in building dams and barrages for common interests and religious, cultural and health centres commonly visited and revered. This gallery opens a new vision of our country as a great ONE and provides an opportunity to know and understand each other.

The child needs toys which can stimulate his emotional feelings. It is the greatest lure that attracts youngsters. The museums have a representative collection of toys of varieties—clay, wooden, plastic, mechanical, scientific and educational.

There is science all around us. The museums in general reveal to the youngster, the world in which he lives, arouses intellectual curiosity and brings outdoor life within its walls and opens the door to a wonder world.

The miniature implements of modern farming, comparative indigenous implements, immense agricultural and irrigation potentialities, alongwith latest knowledge of agriculture form a useful section of this institution. The Aravali area in Rajasthan is full of mineral deposits, some of which still await exploitation. The potentialities are exhibited and explained to our future generation.

It is proposed to change the exhibits at regular intervals so that the life here never becomes dull. The State has now planned to have more museums for the rural children in different blocks and the inter-change and replacement of exhibits would ensure always something new to be seen. The exhibits which essentially are correlated with class-room activities and thus stimulate and supplement school studies, stir the imagination of children, awaken their intellectual curiosity and spur them on to the development of their latent capacities.

●

SALT

There are more than 14,000 known uses for salt and the 34 elements which come from salt. In the medical world, salt is used to help make insulin, and in manufacturing other medicines and drugs. It is used to season food, to cure meat, and to preserve vegetables. Industry uses salt in making soap, plastics, cloth and to bleach paper. Cows must have salt to give milk. The need for salt has influenced history. Wars have been caused by taxes on salt. Towns and cities have risen near salt deposits. Salt has been used by many countries as a medium of exchange. Neither men nor animals can live without it.

President's Awards

We give below brief pen-pictures of some of the distinguished men and women of India who received the President's awards this year.—Editor.

AT A SIMPLE and solemn ceremony held at Rashtrapati Bhavan on October 29, 1958, the President, Dr. Rajendra Prasad, awarded Bharat Ratna to Shri Dhondo Keshav Karve, the only recipient of the award this year, and Padma Vibhushan to Shri Ghanshyamdas Birla who could not be present last year. Twelve persons received Padma Bhushan and sixteen Padma Shri. For the first time, three Sanskrit scholars and one Arabic scholar were given Certificates and Robes of Honour for their contribution in these fields of Oriental Learning.

Bharat Ratna

Dr. Dhondo Keshav Karve

A well-known social worker, educationist and the pioneer in the field of female education, Dr. Karve is now 100 years old. Two years ago he was awarded Padma Vibhushan.

Moved by the sufferings of widows in the country, Dr. Karve established the Widow Re-marriage Association in 1893 and the Hindu Widows Home Association in 1895. He also founded the Indian Women's University in 1916, with Indian languages as the media of instruction.

In recognition of his services to the cause of education and to the uplift of women, he was presented at the age of 91 a purse of Rs. 1 lakh by the public. The country celebrated his centenary early this year and the Government issued a commemoration stamp.

Padma Vibhushan

Shri Ghanshyamdas Birla

One of the foremost Indian industrialists, Shri G. D. Birla has made a large and leading contribution in the development of industry in India in the private sector.

Shri Birla has also established a large number of educational and other public institutions in various parts of the country—the most prominent amongst which is the Birla Educational Trust at Pilani.

Shri Birla, who is also President of the All India Harijan Sevak Sangh, has served on various Indian Delegations abroad. In 1927, he represented India at the Labour Conference at Geneva and in 1930 he was in the Delegation to the Second Round Table Conference. In 1936-37, he was unofficial adviser to the Government of India at the Indo-British trade negotiations.

Shri Birla was a member of the Second Indian Legislative Assembly. He has served as President of the Indian Chamber of Commerce, Calcutta and the Federation of Indian Chambers of Commerce and Industry.

Padma Bhushan

Ustad Allauddin Khan

Ustad Allauddin Khan, who is 92 years old, is one of the most distinguished exponents of the Hindustani School of Music.

At the early age of 7, he

started learning music under the guidance of Shri Gopal Chandra Bhattacharya who unfortunately died before Allauddin Khan could complete his training in vocal music. He then went to Shri Amrita Lal Dutta, a brother of Swami Vivekananda, to learn to play on violin, cornet, clarionet, flute and shahnai. Thereafter he became a disciple of Ustad Wazir Khan of Rampur and remained with him for 33 years and learned the subtleties of the Rabab, Sarod, Sur-Sringar, Dhrupad and Hori.

Ustad Allauddin Khan who has devoted his life time to music is now a Fellow of the Sangeet Natak Akadami and also holds an Akadami Award.

Dr. Narayan Subrao Hardikar

Founder of Rashtriya Seva Mandal, Dr. Narayan Subrao Hardikar, 68, started the organisation as far back as 1923 to inculcate the spirit of service and patriotism in Indian youth. He has been a Member of the Rajya Sabha since 1952.

Dr. Hardikar was only 15 when he responded to the call of serving the country. He qualified as a doctor and went to America to specialise in public health. Under the inspiration of the late Lala Lajpat Rai, Dr. Hardikar devoted his entire time to the struggle for freedom. He was Secretary of the Home Rule League in America from 1917 to 1921. Returning to India he joined the Non-Coperation Movement and later organised the Congress Seva Dal in 1931. He is also the author of a number of publications, e.g., *Our National Flag, Secrets of Organisation and Character Training & Discipline.*

Dr. Hardikar is now actively associated with two charitable organisations — Karnatak Health Institute at Ghataprabha (Belgaum) and Indian Women's Aid Society Hospital, Hubli.

Shri Devi Prasad Roy Chowdhury

First Chairman of the Lalit Kala Akadami, Shri Roy Chowdhury is a painter and sculptor of repute. For his outstanding work as a sculptor, he was given the first prize in the National Sculpture Exhibition held a few years ago.

The paintings of Shri Roy Chowdhury have been exhibited at the South Keningston Art Gallery and in Paris at the instance of UNESCO. The London Studio and New York International Studio have also reproduced his paintings.

Shri Roy Chowdhury, also an author of several Bengali short story books, novels and plays, is at present the principal of the Government Arts and Crafts School, Madras. In 1955 he was appointed Director of the Regional Arts Seminar organised by UNESCO at Tokyo.

Shri Salim Ali

Shri Salim Moizuddin Abdul Ali is a Biologist specialising in Ornithology, parti-

cularly in the study of Indian birds. In 1953 he was awarded the Asiatic Society's Joy Gobinda Law Memorial Medal for researches in Asiatic Zoology and the Yale University's Seessel Zoological Research Fellowship.

Shri Salim Ali has been keenly interested in birds from boyhood and his field surveys of birds, largely at his own expense, cover practically all parts of India and Pakistan. He has also taken out research expeditions to Tibet and Afghanistan. He is the author of several books on birds in the various parts of India and has contributed a large number of papers on Indian birds to various Indian and foreign scientific periodicals.

Shri Salim Ali has been nominated by the Government of India as Chairman of the Birds Wing of the Indian Board for Wild Life and also of the Indian National Section of the International Council for Bird Preservation. He is connected with a number of Ornithological Associations in India and abroad and is also a member of the Permanent Executive Committee of

the International Ornithological Congresses.

Shri Surya Narayan Vyas

Shri Surya Narayan Vyas is an eminent astronomer, literateur and philologist who has made an extensive study of Sanskrit, Prakrit, Marathi and Gujerati.

Shri Vyas is also a learned scholar of Ancient Indian History and Culture. His natural love for Malwa has inspired him to study extensively about Samrat Vikramaditya, Poet Kalidas, Maharaja Bhoj and others. He has been a member of several Hindi societies, such as Bharatiya Itihas Parishad. He was elected President of the Itihas Sanshodhan Sabha in 1938 when under his guidance excavation work was started in Ujjain in search of ancient remains. He founded the All-India Kalidas Parishad to popularise the works of the great Poet in India and abroad.

Shri Vyas is connected with several organisations for the promotion of Hindi and Sanskrit and is the editor and author of a number of papers and books. As a journalist he is known for his critical notes and satires published in his Hindi monthly Vikrami.

Dr. Darashaw Nosherwan Wadia

Dr. Darashaw Nosherwan Wadia is a leading geologist who has 50 years of distinguished work in the field. These days he is serving as Geological Adviser in India's Atomic Energy Commission.

Recipient of many foreign medals, including the Back Award of the Royal Geographical Society, London, Dr. Nosherwan Wadia has been elected to the various institutions and Congresses of Science. In 1942 and 1943 he was President of Indian Science Congress and in 1945 and 1946 of the National Institute of Sciences of India.

Shri Wadia has represented India both as delegate and leader at international conferences in the U.K., France, Norway, Switzerland, U.S.A. and Australia. Between 1938-44 he was Mineral Adviser to the Government of Ceylon. He is the author of 'Geology of India' and has contributed several papers on the subject.

Padma Shri

Shri Debaki Kumar Bose

Shri Debaki Kumar Bose, a veteran film director, has to his credit nearly 40 films in Bengali, Hindi, Marathi and Tamil. His outstanding pictures are "Chandidas" and "Puran Bhakt" which brought him country-wide fame.

Shri Bose joined the non-cooperation movement in 1921 and started his career as a staff member of the weekly "Sakti", a nationalist paper published from Burdwan. His first assignment in the film field was that of a story writer-cum-actor in 1929 in "Flames of Flesh".

The film "Seeta" produced by him in 1934 was the first Indian film to be exhibited abroad at the Venice Film Festival where it earned the Certificate of Merit. The Sangeet Natak Akadami has given an award to Shri Bose for his outstanding contribution to film art.

Shrimati Devika Rani Roerich

Shrimati Devika Rani Roerich, grand-niece of Poet Rabindranath Tagore and popularly known as the "First Lady of the Indian Screen", is one of the pioneers in the Indian film world.

In collaboration with her late husband Shri Himansu Rai, she founded the Bombay Talkies which nurtured a large number of talented producers, directors, actors, musicians, writers and technicians in the country.

In 1945, Shrimati Devika Rani retired from the Bombay Talkies and married the distinguished Russian artist, Mr. Svetoslav Roerich. She is a member of the Sangeet Natak Akadami as well as of the National Academy of Dance, Drama, Music and Films.

(To be continued)

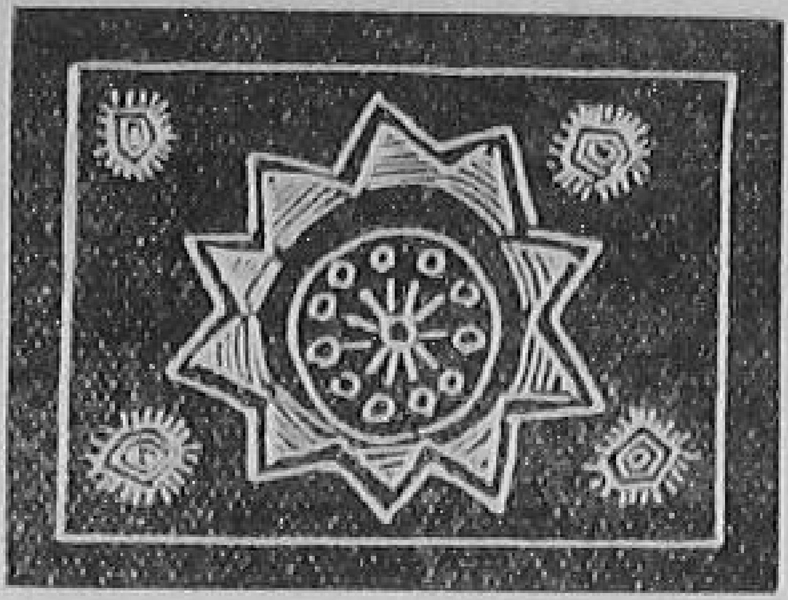

The Story of the Wheat Grain

U. N. Chatterjee

Can you guess my age? Well, I am much older than the human civilization as revealed to you in the pages of history. They found me in the excavated ruins of Mohenjo-Daro—already fully developed and capable of sustaining as well as nourishing the children of the earth.

My original habitation was in the region now covered by Afghanistan and the areas surrounding it. But that does not matter. I am thoroughly at home on the plains of this vast country—specially in those of the north and north-western regions, where I grow as a winter crop. They put me into the soil in September-October. I grow and bloom during the cold season, the showers in winter being specially needed for my growth and development; and I am ready to be harvested with the approach of summer.

Having been cropped, I am removed to the threshing floor where the grain is separated from the straw and the coarse brownish outer covering, the glumes. And there accumulate little hillocks of grain, rich yellow in colour or amber or even red, ready to be transported for marketing or storage.

I occupy a proud place among the cereals of India—I happen to be in the envious position of being the most favoured one among them in this land of ours. This is so not because they are unduly kind to me but because of my intrinsic merits. Nutrition experts have applauded me. I am richly endowed with proteins, carbohydrates, vitamin B, iron and phosphorous—all of which contribute to a sound body and healthy living.

But for the way they utilize me, I would be more serviceable indeed. As a preliminary step to putting me to use they powder me in mills into flour during which operation a large part of my vitamin B content gets lost; but this seems to be necessary evil as milling reduces me to an acceptable form. Then the flour has to undergo a process of cleaning and sieving which removes the crushed remains of my skin or outer covering and a portion of the inner or aleuron layer, which together form the bran, and the little life-germ—the embryo. The bran contains proteins, and vitamin B, iron and phosphorus and the embryo, proteins and vitamin B; and with their removal these nutritive elements become unavailable; people thus unwittingly deny themselves, in some measure at least, these nourishing constituents of the grain.

It may be mentioned here that the untreated flour containing the bran and the embryo, whole-meal-flour as it is called, although somewhat brownish in appearance, should be considered preferable to the white flour obtained after cleaning. The reason is obvious; the wholemeal has the advantage of retaining all the health-giving elements mentioned above more or less intact.

Nonetheless, whatever that remains, even after these processes of milling and cleaning are over, serves to provide a wholesome diet with an ample supply of carborydrates and proteins derived mostly from the core of the grain—the endosperm. The carbohydrates are necessary for heat and energy and the proteins for flesh and muscles. That is the reason why I am preferred to other cereals; that is why I have been able to gain the recommendation of the dietitian.

I am sought after by the healthiest section of the population for whose physical welfare I have always kept a constant vigil.

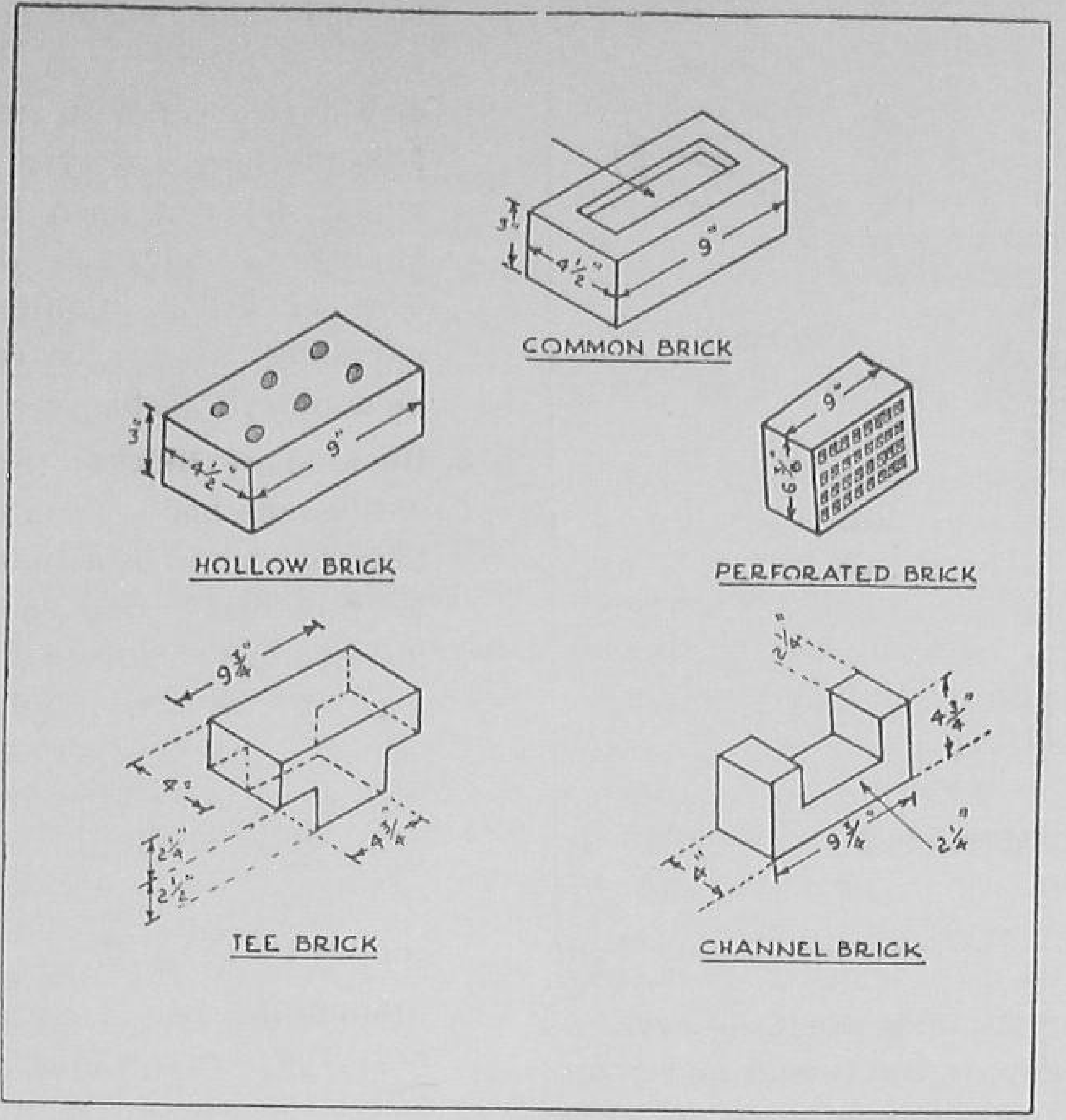

Brick Manufacture in India

G. C. Mathur

National Buildings Organisation.

BRICK HAS been a principal building material in India. Its simple method of manufacture and local availability at low cost has made it one of the most popular materials of construction. As a manufactured building material, the brick appears to be the oldest. Today, in almost every part of India bricks are being manufactured and used in the construction of houses, buildings, roads, bridges, irrigation and drainage works, etc. It has been very roughly estimated that about 500 crores of bricks worth 40 to 50 crores of rupees are manufactured annually in our country.

In recent times there has been a great demand for bricks on account of intense building activities proceeding under the country's Five Year Plans. And as a result, bricks have become a scarce commodity and their prices have gone very high. Such a situation is in fact a boon for the development of brick industry. The time, therefore, perhaps is never more opportune than to-day for taking steps to improve the existing methods of brick making and to organise the brick industry.

SPECIAL FEATURES

The process of brick making is very simple and does not involve the use of machinery or skilled labour. Plastic and vitrifiable clays—the raw material required for brick making—are available in abundant quantities all over the country. The brick manufacture has therefore, come into existence as an important village industry of India, and provides seasonal employment to farmers, when they are not engaged on their fields, and enables them to earn their livelihood and to produce bricks for building their houses.

The Manufacturing Process

In the process of manufacturing bricks all the operations are done manually. Suitable clay is dug, screened, mixed with water, sand or other admixtures, if necessary, and kneaded to form a plastic loam of required consistency. With the help of moulds bricks of suitable sizes are cast and stacked in open to dry. After drying, they are fired in kilns and when fully burnt, and cooled they are drawn out for use.

Defects: The existing method of brick manufacture has the following defects:

1. As there is no knowledge of suitability of clay for brick making, bricks of poor quality are produced.
2. Since the work of brick making is done manually and seasonally it restricts

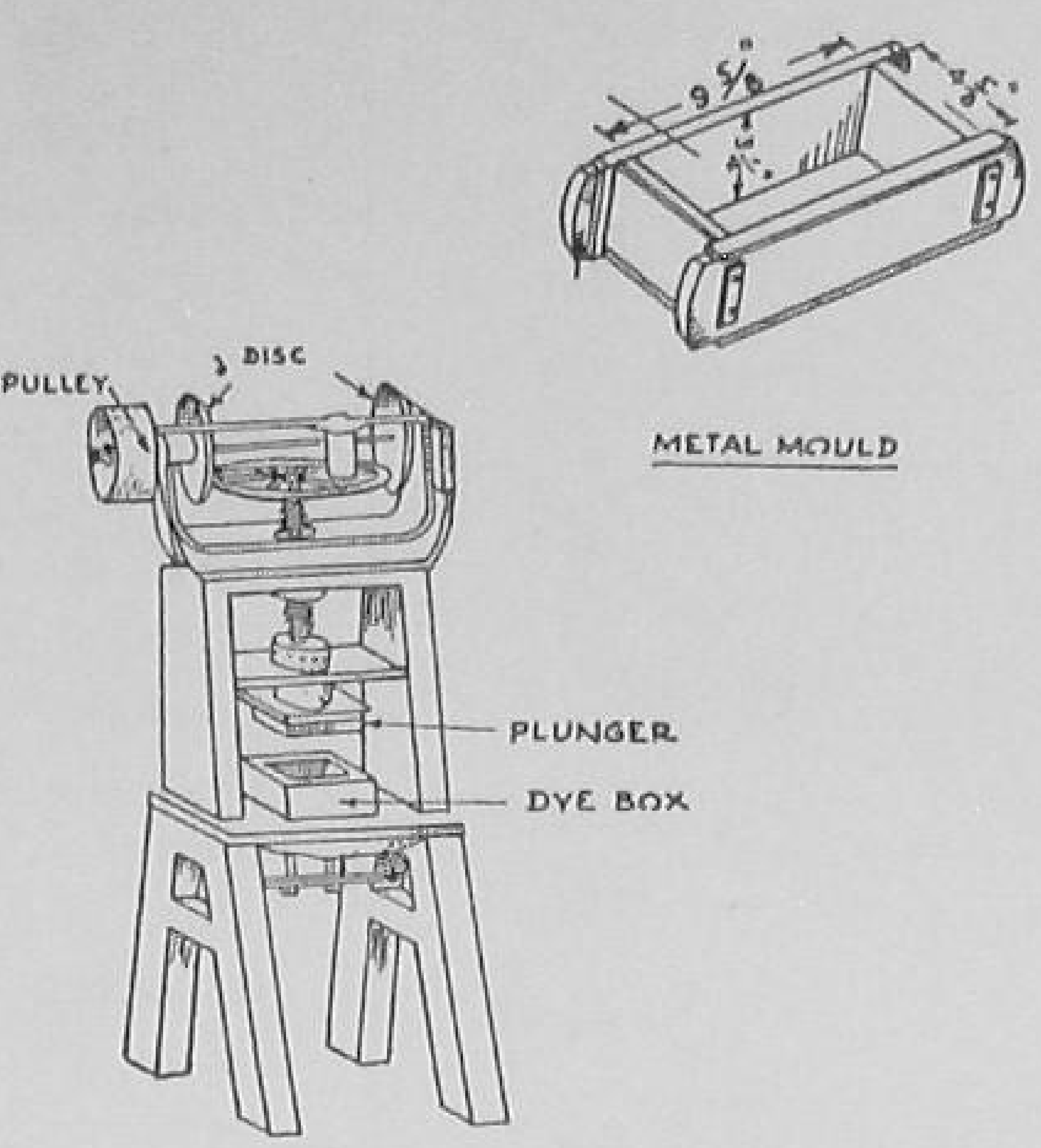

BRICK MOULDING PRESS

METAL MOULD

production both in quantity and quality.

3. On account of improper pugging, mixing is not homogeneous and the required plasticity in the clay is not obtained. As a result of this bricks warp and crack on drying and firing.
4. Lack of control on firing and uneven heating of the kilns result in considerable wastage of fuel and improper burning of bricks. Ordinarily it has been found that only 50–60% bricks are fully burnt. Sometimes total rejects exceed 20 to 30%. In fact this is one of the chief reasons why the quantity of good bricks produced is less and the cost of production high.

Improvement in Manufacture: Since the method of brick manufacture, even today, is traditional and primitive, there is great scope for improvement. Some of the improvements suggested are as follows :—

1. **Laboratory Examination of Clays**: By laboratory examination the suitability of the clay for brick making should be determined and according to the moulding and firing characteristics of clays suitable methods of moulding and firing should be adopted. Some of the clays which generally warp and crack on drying and firing can be improved by the use of certain additives and by firing them at correct temperatures.
2. **Use of Machine:** By employing machines for pugging, the mixing can be made homogeneous and required plasticity in the clay developed. With suitable machine, the type of which depends upon the quality of clay and the type of bricks required, moulding of bricks can be done at a faster rate.
3. **Burning of Bricks:** Scientific method of brick burning should be adopted to minimise the heat losses and to increase the out-put of well-burnt bricks. And for this continuous type of kilns like Bull Strench Kilns and Hoffmann's Circular Kilns should be adopted.
4. **Standardisation:** To organise the brick industry, standardisation of all the process of brick making is very essential. The India Standards Institution has recommended the adoption of 20×10×10 cm brick of minimum compressive strength of 25 kgm per sq. cm. as a standard and codes of practices are being formulated.
5. **Brick Kiln Co-operatives:** The working of 772 Brick Kilns Co-operatives in Uttar Pradesh where 55 thousand men were employed to produce more than 97 crores of bricks costing about 1.95 crores of rupees has proved that by co-operative venture bricks can be produced economically at village level.

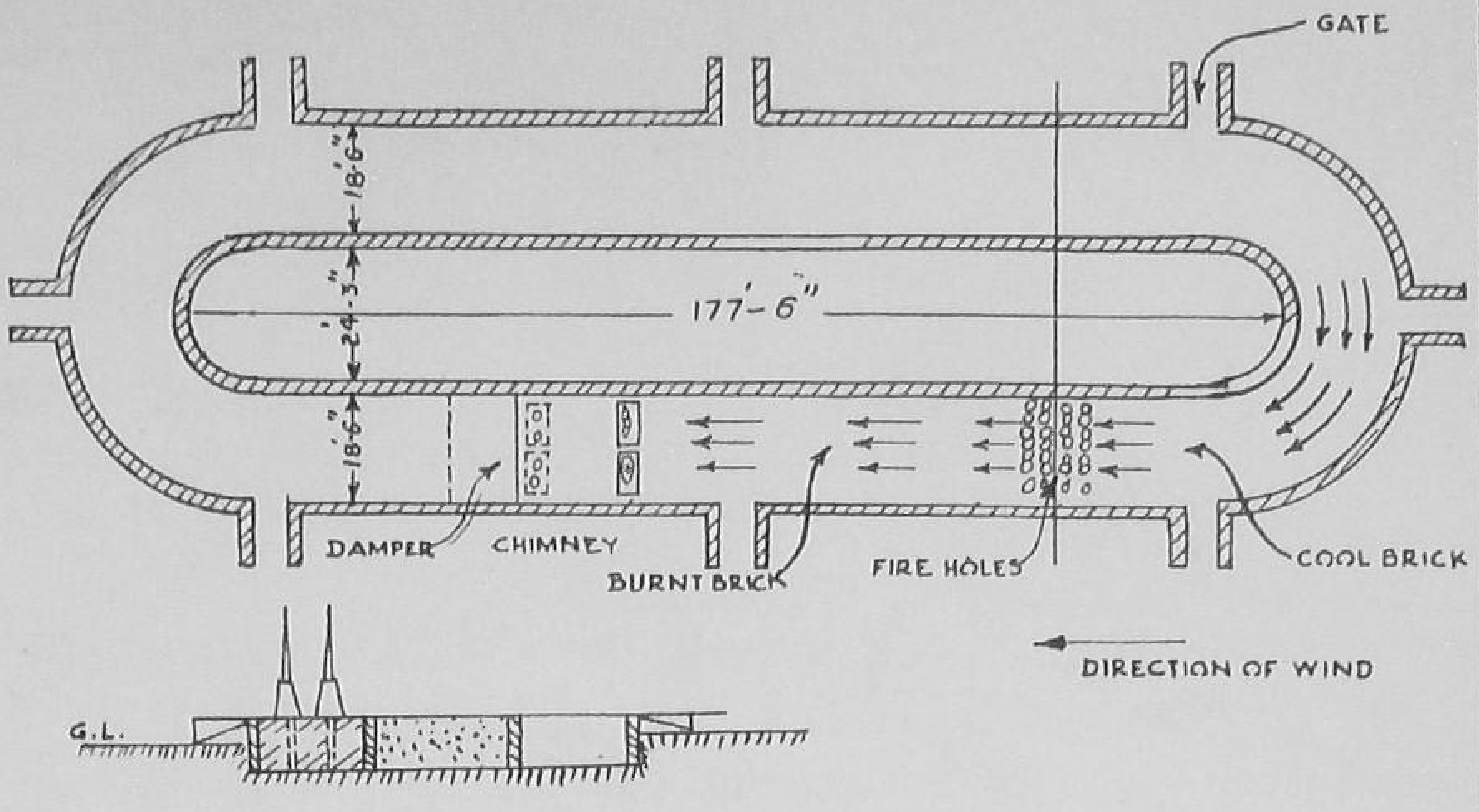

BULL'S TRENCH KILN

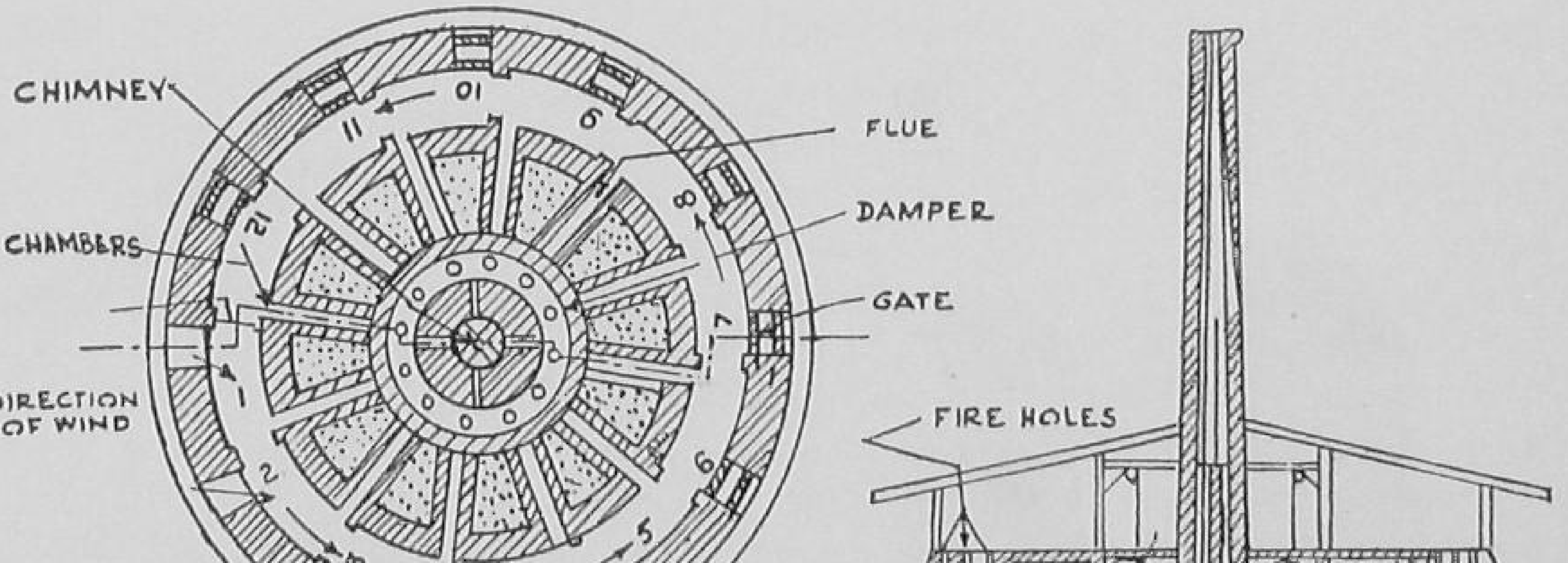

HOFFMANN'S CIRCULER KILN

MARCH OF TIME

AS SEEN BY OUR CARTOONIST

HY SHOULD I OLLOW YOUR AGE LEADER, BELONG TO A FERENT POLITICAL PARTY!
HAS COME TO THE VILLAGE — NOW WE WOULD HAVE PLENTY TO GOSSIP ABOUT!
T A P, HOW NG AN E POLICY?
JAYA PRAKASH NARAYAN CAN SAY THAT COMMUNITY DEVELOPMENT IS WASTE OF MONEY, BUT WHERE FROM DID WE GET THE VILLAGE DISPENSARY, THE SCHOOL AND THE READING ROOM?
INSURANCE AGENT

Green Manuring Practices

THE movement for the increased utilization of green manure in agriculture has rapidly gained momentum throughout India in recent months.

The fertility of the soil depends mainly upon the presence of the more important plant nutrients, like potash, phosphates, lime and nitrogen. Indian soils are generally deficient in nitrogen. The major crops in India remove annually over 3.8 million tons of nitrogen from the soil but the quantity of manures which is available for application to crops represents less than a million ton of nitrogen in a year. This has led to the stabilisation of agricultural yield at a low level. Of the various sources of nitrogen, green manure and rural composts are among the richest. Extensive research both in India and abroad have established this fact. In some of the research projects the increase in the yield of paddy and wheat due to the application of green manure ranges from 20 to 30 per cent.

The qualifications for being a good green manure plant are so many and so varied that one wonders at first whether any plant will meet the requirements. The plant should pull through droughty conditions in the early stages and water-logging in the later stages of its growth. It should be of a cosmopolitan type and must flourish on all types of soils. It should have no adverse root effect on adjoining crops, must be distasteful to goats and cattle or grow so rapidly that the foliage is quickly beyond the reach of these animals. And it should be able to withstand frequent lopping and at the same time produce large quantities of leaves. In the case of the green manure plant for use in paddy fields, the species should be fast growing and capable of yielding 4 to 8 thousand pounds of green manure per acre in 4 to 6 weeks, before the main crops in July and August, within the time required for raising paddy seedlings for transplantation. In spite of these exacting requirements there are quite a few plants which have proved very efficacious for the purposes of green manure.

The Planning Commission has been paying special attention to this programme. In August 1957, it circulated to the States a detailed note containing practical suggestions for making every holding and every village self-sufficient in green manure. The Conference of State Ministers of Agriculture held at Srinagar in October, 1957 recommended that intensive campaigns should be started in the States so that within two years each holding would be able to produce its own basic requirements of green manure. Similar recommendations were also made in the Report of the Committee on Plan Projects on National Extension Service and Community Development Blocks. In April-May, 1958, the Plan-

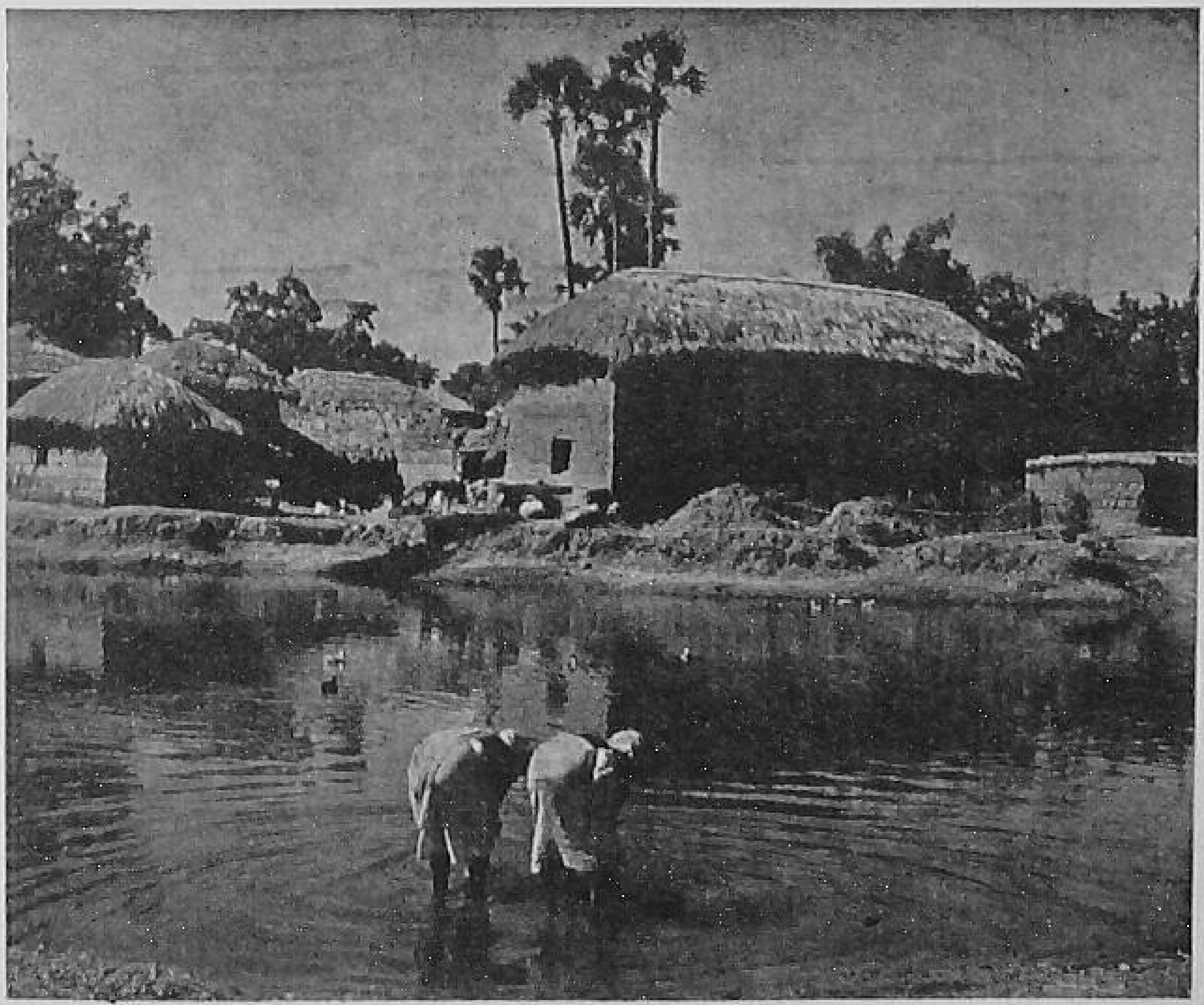

A village scene of West Bengal

ning Commission again contacted the Development Commissioners and Directors of Agriculture in the various States on this subject.

ACTION BY STATES

The response has been very promising in almost all the zones. Amongst the states in the Southern Zone, Kerala fixed a target for 1958-59 of one crore of plants in the form of seeds, seedlings and cuttings. In June the Kerala Government celebrated a Glyricidia Week. Schools, Government offices and Community Blocks Administrations co-operated in planting the seeds. The State has since reported that the target of one crore has already been reached. Its long-term target of plantation is 26.6 crores spread over a period of five years. This works out at 100 shrubs of Glyricidia for every acre of paddy and one shrub for every coconut tree.

In Andhra Pradesh, the Agriculture Department has been taking special steps for popularizing Glyricidia and Sesbania for some years now. A scheme for large-scale distribution of green manure seeds, to make the cultivations self-sufficient, has been taken up by this State. Under the scheme, every district is given a target for the distribution of seeds, in 4 oz. packets costing about 8 to 10 naye paise. The State has decided to distribute 3,20,000 packets during the current season.

Madras has been popularizing green manure for the last ten years. The State is now the main source of supply of seeds to Kerala, Orissa and some other States. It has already conducted several campaigns and proposes to hold a Glyricidia competition.

Similar progress has been made in the Central and Western Zones. An intensive programme for raising green manure seeds was started in U.P. in 1957-58 when 7½ lakh packets of seeds totalling to over 263 tons were distributed to cultivators for being sown as borders and mixed crops. During 1958-59, the plan is to make every Gaon Sabha responsible for raising its own requirements of seeds. It is proposed to give a total of 14 seers of these seeds in this year to each Gaon Sabha for multiplication. The Sabha will distribute them to small cultivators who undertake to give back to the Sabha 40 times the quantity supplied to them.

The Bombay State has also decided to launch a special scheme whereby sun-hemp seeds will be made available to cultivators at a subsidized rate, 25 per cent of the cost to be met by the Government. An area of about 16,000 acres is proposed to be brought under green manure under the scheme during the year.

In the Eastern Zone, the Assam Government has so far distributed 3 lakh packets of seeds containing 2 oz. each. The Bihar Government proposes to distribute 10 lakh seed packets and cover 3 lakh acres of land during the current season. The campaign is being backed by intensive publicity and arrangements for film shows and the distribution of 1½ lakh leaflets have been made. In West Bengal 4 lakh packets of green manure seeds are to be distributed during 1958-59. Each Gram Sevak and Agricultural Assistant has been asked to distribute a certain number of packets.

Coming to the Northern Zone, the possibilities of green manure in Rajasthan are limited due to low and erratic rainfall. However, a target of 40,000 acres has been fixed for the distribution of seeds for multiplication, during 1958-59. Inter-cropping of maize and jowar with leguminous crops is also being attempted so that after harvesting the main crop the leguminous crops may be buried for green manuring.

Punjab has its own species of green manure plants. A campaign has been recently launched to popularise the growing of these shrubs for green manure purposes.

In the Union territory of Manipur 77 acres of demonstration plots were laid out in April, 1958. The target area for demonstration plots is 175 acres for 1958-59.

FUEL RESOURCES IN INDIA

COAL, OIL and hydro-electricity contribute only 20% of India's total energy requirements. Nearly 45.5% is supplied by animal dung and wood and the remaining 34.5% comes from human and animal effort.

The use of dung as a fuel in India amounts to an annual loss of a valuable commodity equivalent to 600 m. tons of fertilizers.

In India nearly 40 million tons of wood is burnt as fuel every year causing a heavy depletion of forest reserves. This must be reduced in order to check the floods and soil erosion.

The present demand for crude oil in India is nearly 6 million tons. It is expected to increase to about 7.5 and 13 million tons by the end of the 2nd and 3rd Five Year Plan periods respectively.

India's present oil imports cost over Rs. 85 crores every year. This figure shall increase to over 4 times by 1976 if new potential oil fields are not discovered in the country by that time.

The present consumption of petroleum in India is 3 gallons per head. This figure is as high as 600 gallons per head in some highly industrialised countries.

The first oil well was drilled in Pennsylvania in 1859 by Edwin Drake with the help of a wooden derrick. The first well in India was drilled in 1866 at Jaipur in Upper Assam.

World's deepest well was drilled in South Lousiana to a depth of 22,570 ft. The deepest in Asia was drilled in Moran field in Assam to a depth of 13,739 ft.

A rig capable of drilling to depths of 10,000 to 15,000 ft. may cost up to Rs. 50 lakhs. The sinking of a 10,000 ft. test well may cost even more.

The value of oil produced in a single day in some wells in Middle East exceeds the money spent in sinking them.

A complete rig with all the necessary tools, equipment and machinery may weigh as much as 2,000 tons.

Drilling of a well to a depth of about 10,000 ft. requires about 125 skilled men, 12,000 ft. of steel casing, 10,000 to 12,000 ft of drill pipe, 25 to 50 drilling bits, 2,000 to 5,000 sacks of cement and 3,000 barrels of fuel oil.

Nurse Nalini Parulkar schools a young girl in cleanliness and tidyness

SURATGARH FARM

IN THE waterless wilderness stretching for miles around Suratgarh, the tehsil headquarters in Ganganagar district in Rajasthan, few villages exist. A handful of souls who find shelter in them brave the hot winds and sandstorms as the mercury shoots up to 120° Fahrenheit during summer, eking a miserable existence out of acres that lie scorched under the blazing desert sun.

The earth is thirsty but the rain comes in niggardly measure—only four to six inches in a year. There is shortage of water and of food; there are no cottage industries, no satisfactory means of communication—indeed no incentive whatsoever to live in this burning land on the fringe of the Rajasthan desert.

This is the setting for the 30,000 acre Central Mechanised Farm where today a force of over 500 workers equipped with modern agricultural machinery are waging a war against adverse conditions to make it the nucleus for the economic development of the entire area.

The story of the Central Mechanised Farm of the Government of India at Suratgarh goes back to the close of 1955 when the Soviet Leaders, Marshal Bulganin and Mr. Khruschev, during their State visit saw the Terai State Farm in Uttar Pradesh and the Aeray Milk Colony in Bombay and offered a gift of agricultural machinery and equipment for the establishment of a single compact farm of about 30,000 acres. The offer was accepted by India.

Farm Machinery

In early 1956, five ship-loads of agricultural machinery and other equipment arrived at Bombay port from the U.S.S.R. in quick succession, within a brief period of two-three months. This was even before the decision to set up the farm at Suratgarh had been taken. The gift machinery consisted of 69 tractors of varying capacity, 75 ploughs, 50 cultivators, 80 seed-drills, 500 harrow zig-zags, 42 couplers, 30 rollers, 50 winnowing machines, 60 harvester combines, 3 seed-loaders and 2 grain-cleaning machines. For transport purposes, a number of trucks, bowzers, passenger cars and jeeps were received. Equipment for setting up a workshop included lathes, machines for drilling and milling, electric welding sets and mobile workshop trucks. There was also a 15 kw electric generator set and a complete hundred-line automatic telephone exchange.

While five Russian experts began to train Indian technicians in assembling, maintenance and actual handling of the machinery, the site for the farm was selected. Situated mostly in the Ghaghar bed, generally known as the Nali area, the 30,670-acre land was flat and clear except for the intensive growth of xerophytic bushes and small mounds. A soil survey carried out by the Indian Agricultural Research Institute, New Delhi, revealed that about 18,300 acres of land was good and fit for growing crops under assured supply of irrigation water. About 4,800 acres of land was alkaline and could be reclaimed by application of gypsum when perennial irrigation was available. The remaining 7,500 acres contained large amounts of salt which made the soil comparatively less productive.

As a result of the soil survey, the layout of the farm was worked out. Of the 30,670 acres, 22,670 acres were planned for agricultural operations, 2,000 acres for orchards, 1,500 acres for animal husbandry schemes and 4,500 acres for roads, buildings, irrigation channels and forest belts. The objectives of the farm were to produce pure pedigree seeds of various crops, raise orchards, rear pedigree bulls and rams and establish a poultry farm for producing improved birds.

Beginnings

Though the Russian machinery had been received in one lot and a suitable site for the farm had been selected, it was not possible fully to use the machinery or start production until the land had been fairly developed and perennial water supply assured. This needed time, but the organi-

sers were impatient. It was decided to start production on however small a scale the non-perennial water supply permitted. The decision having been taken, a fleet of 26 tractors and ancillary equipment moved to the site on the Independence Day, August 15, 1956, marking the inauguration of the farm.

Despite lack of irrigation water, shortage of labour and many other odds, about 10,000 acres—1/3 of the total area—have been reclaimed and developed in the last two years, and the Farm during the last two rabi seasons and one kharif season has been able to grow nearly 37,000 maunds of agricultural produce valued at about Rs. 9 lakhs. More than a hundred miles of roads and about the same length of water courses have been laid within the area; over 10,000 trees have been planted, half of which survived despite lack of water, and two nurseries of fruit-plants have been set up.

Trek Towards Goal

Most of the problems still remain primarily because time is required to solve them. The odds are, however, being eliminated. More than 40% of the agricultural machinery has already been brought into use for various operations, and the irrigation facilities have been improved by starting lift irrigation projects. The labour problem, which is very acute in this scarcely populated area, is being solved by offering reasonable wages and tented accommodation to the labourers. A number of residential and non-residential buildings for accommodating staff and offices are now coming up and are expected to be completed in another six months.

Once perennial supply of irrigation water from the Bhakra system has been assured and horticulture and animal husbandry schemes started, the farm will go into full swing. This is expected to materialise by the end of the Second Plan. When fully developed, the farm will produce about 70,000 maunds of pure wheat seed and about 12,000 maunds of improved cotton seed, besides seeds of other crops. Additionally, about 150 bulls of the Haryana and Murrah breeds, 200 pedigree rams of the Bikaneri breed and about 10,000 birds of improved poultry breeds will be available for upgrading indigenous stock. Farm nurseries will supply about 50,000 plants annually for local distribution.

When that happens, new vistas of economic prosperity in the form of flourishing trade and commerce, revived cottage industries and increased employment will lie open to the people who have for so long remained afflicted with stark misery and poverty.

It is to this end that men and machinery are striving ceaselessly at Suratgarh—the little town in Rajasthan which has come to represent the romance in human endeavour to cause yet another desert to blossom as the rose.

●

Birth-day Presents

The Prime Minister received a novel birth-day gift this year, from the villagers of Rajasthan. Representatives of a few selected village panchayats presented to him nearly 5,000 endowment policies registered under the Rural Insurance Scheme in Rajasthan. The Policies have been registered in 20 community development blocks covering approximately 3,00,000 families. The Policy-holders have insured their lives for over Rs. 1.47 crore.

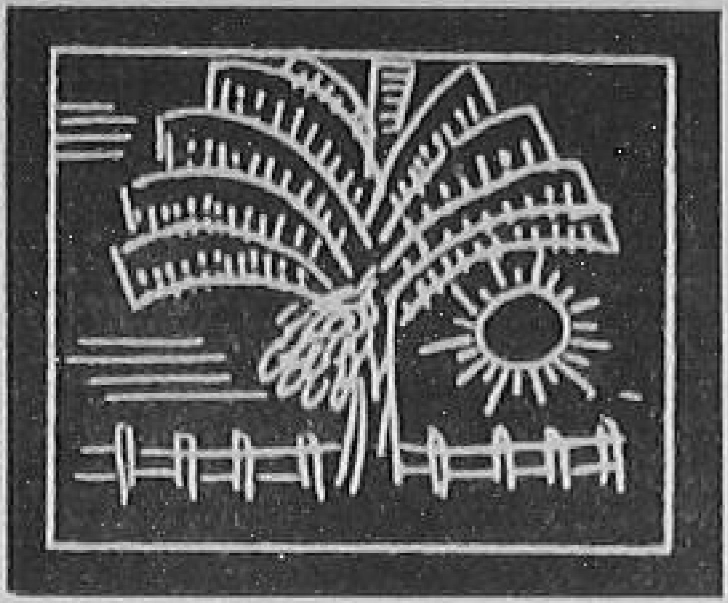

SOIL CONSERVATION IN ORISSA

Prafulla Chandra Mohanty, *BDO, Kharmunda.*

ONCE ORISSA was famous for its extensive evergreen forests. But for the shifting cultivation practised by the aboriginals, indiscriminate deforestation resorted to by the ex-rulers of the Princely States and lack of soil conservation measures, the deep forests of this State are now things of the past. Even in Koraput District where once existed one of the densest of forests known as Dandakaranya, the hills have grown bald, and zerophytic species have come out inspite of the fact that the climate of the place is very humid with a heavy rainfall of about 85 inches. Now as much as 12,000 sq. miles covering 1/5th of the land surface of this State suffer from soil erosion due to shifting cultivation. And there are huge tracts covered with sand, due to the flood havoc. It is estimated that about 5.4 million acres of land including coastal areas are lying waste, which can be covered with grass, fodder and fuel trees. Observation during the last few years shows that the rainfall is on the decrease and has become uncertain, and this adds to the urgency of the soil and water conservation problems of the State.

A comprehensive programme for this State was initiated in the year 1954 under the Forest Department. But due to the importance of soil conservation planning in agricultural land, the section has since been transferred to the Department of Agriculture with a Deputy Director as technical adviser to the Director of Agriculture. In view of the urgency of checking soil erosion in the Ib and Machhakund catchment areas, especially to prevent silt deposit in the Hirakud and Machhakund reservoirs, the State was divided into two divisions each under a Class I Soil Conservation Officer.

Uptill now four Soil Conservation Demonstration Centers at: (1) Rajgangpur, in Sundargarh District, (2) Koraput in Koraput District, (3) Anugul, in Dhenkanal District (4) Larambha, in Sambalpur District have been started. The demonstration centres are located in areas where soil erosion is taking place at an accelerated rate and there is urgent need of conservation measures. Besides demonstration of different types of soil conservation measures like Contour Bunding, Bench Terracing, Grassed Water Way, Gullyplugging, Afforestation etc., research on local problems are also undertaken to find out: (1) suitable grass and legumes for the locality; (2) suitable tree species for the afforestation work; (3) suitable size for contour bunds; (4) suitable techniques for gully reclamation; and (5) suitable means of pasture development. Field laboratories, nurseries for grass and trees, meteriological observations and experimental plots to determine loss of soil and water and suitable cropping patterns have been established in the above centres. In addition, about 6,000 acres of land have been brought under different soil conservation measures around the centres.

For the sucessful implementation of the Machhakund Hydroelectric scheme, especially for the reduction of flood peaks and silt transport in the main river and its various tributaries, intensive soil conservation measures are necessary. The Machhakund basin comprises of an

area of 858 sq. miles out of which 290 sq. miles lie in Orissa and are in a state of progressive erosion. Due to 'Podu' or shifting cultivation practised by the aboriginal hill tribes the entire landscape is a grim sight of exposed rocks. For the Machhakund basin a scheme costing Rs. 42,92,300 for a period of 8 years has been adopted with the help of the Central Government. The scheme is for soil conservation, water conservation, afforestation and for the introduction of better methods of farming. A detailed survey of the Machhakund basin has been undertaken. About 50,000 people live in this basin. It has been estimated that lands available below the 10% slope of the valley is sufficient for the inhabitants. Hence, it has been proposed to seal off the upper portion beyond the 10% demarcation line from cultivation and grazing and reserve it for afforestation. The lower portion will be made suitable for cultivation by contour bunds and grassed water ways. In the upper portion, cashew nuts and bamboo have been introduced with Agave plants in the middle for prevention of fire. Within a short span of 3 years the scheme has made good headway and thousands of cashew nuts, bamboo and Agave plants have started doning the bald hill tops with a green cap. The lower portion have been covered with contour bunds and grassed-waterways and have been made suitable for agriculture. Similar work has been done in the Ib basin also.

After this successful experiment, under the guidance of the Development Commissioner the Government of Orissa is proposing to extend the scheme to all the Blocks and convert it into a mass movement. All the Block Development Officers, Sub-Divisional Officers and District Collectors have been given a reorientation training in Soil Conservation. Special Programme of intensive soil conservation work have been formulated for the Special Multipurpose Blocks and it is proposed to carry out a mass campaign for planting Cashew nut trees, which is a very good dollar-earner, within the 10% slope of the hilly tracts and bamboo and Agave beyond it. In the coastal districts, especially in the sandy portions, extensive plantation of cashew nuts have been undertaken. Besides, in all the Blocks extensive plantation of fruit trees like, mango, jackfruits, etc., and quick growing fuel trees have been undertaken. The movement after the experimental stage has gained momentum and with the active support of the people will be able to provide a green cover of grass, fuel, fodder and forest over the entire landscape of the State. And within a foreseeable future our farmers may not have to look to the sky for the rains.

"I AM EVERY THING"

Sir,

Our B.D.O. says "I have organised Mahila Mandals, I have formed Vikas Mandals, I have persuaded the people to construct the school buildings immediately, I have booked the expenditure, I have collected Tagai applications, I have distributed loans, I have taken demonstration plots, I have organised the Co-operative Society, I have taught the office staff how to work, I have awakened the sleeping panchayats, I have done this thing, I have done every thing, V.L.Ws have done nothing. E.Os. are doing nothing. Staff is sleeping. Due to me the Block is progressing."

In my opinion, considering the work of B.D.O., the Community pattern should be changed. There should not be Gram Sevaks, there should not be E.Os., there should be no staff. Only B.D.O. is enough. He is everything. "He is a king".

Stage I Block
Osmanabad (Bombay)
Dated 30-10-1958

Yours etc.

A Gram Sevak.

CAREERS OPEN TO YOU

CO-OPERATIVE SUPERVISOR

CO-OPERATION is a form of business organisation wherein persons voluntarily associate together on a basis of equality for the promotion of their common economic interests. The Co-operative movement in India now covers various aspects of economic life in the rural as well as urban areas: credit, marketing, farming, processing, housing, transport, weaving, insurance, banks, cottage industries, etc.

In most of the States, a separate department, headed by a Registrar of Co-operative Societies, is responsible for the registration, inspection and audit of these societies and sees to their proper working in accordance with the Act, Rules and bye-laws. The Registrar is assisted by suitable staff for the purpose. At the higher level there are the Joint , Deputy and Assistant Registrars, to whom certain powers are delegated by the Registrar. Below them are the inspectors, auditors, etc., the bulk of the staff who are in constant and intimate touch with the working of individual societies. In some States, the work of supervision is performed by non-official bodies through their subordinate staff. The supervisors, sub-inspectors, junior auditors, etc., form the subordinate ranks.

Co-operative institutions and societies are usually administered by non-official bodies. The staff consists of a managing director (manager or secretary), a branch manager (or assistant secretary), an accountant, a cashier, and other clerical and executive staff.

A Co-operative Supervisor's work is to supervise the administration of Co-operative societies and to attend to most of the preliminary statutory functions of the registrar.

For this purpose, the Co-operative societies under his charge are frequently visited, their working and financial conditions are enquired into, their audit (where there is no separate audit department) is carried out, preliminary examination of the accounts of societies is made, cash registers are verified, rectification of irregularities is ensured, and in some cases even property and debt registers for the members of the societies are written up. Normal credit requirements of individual applicants are assessed, a report on their loan applications is prepared and submitted to higher authorities, and enquiries are made whether the instalments for repayment of deposits and borrowings are suitable. In addition, the societies and banks are helped in the collection of debts.

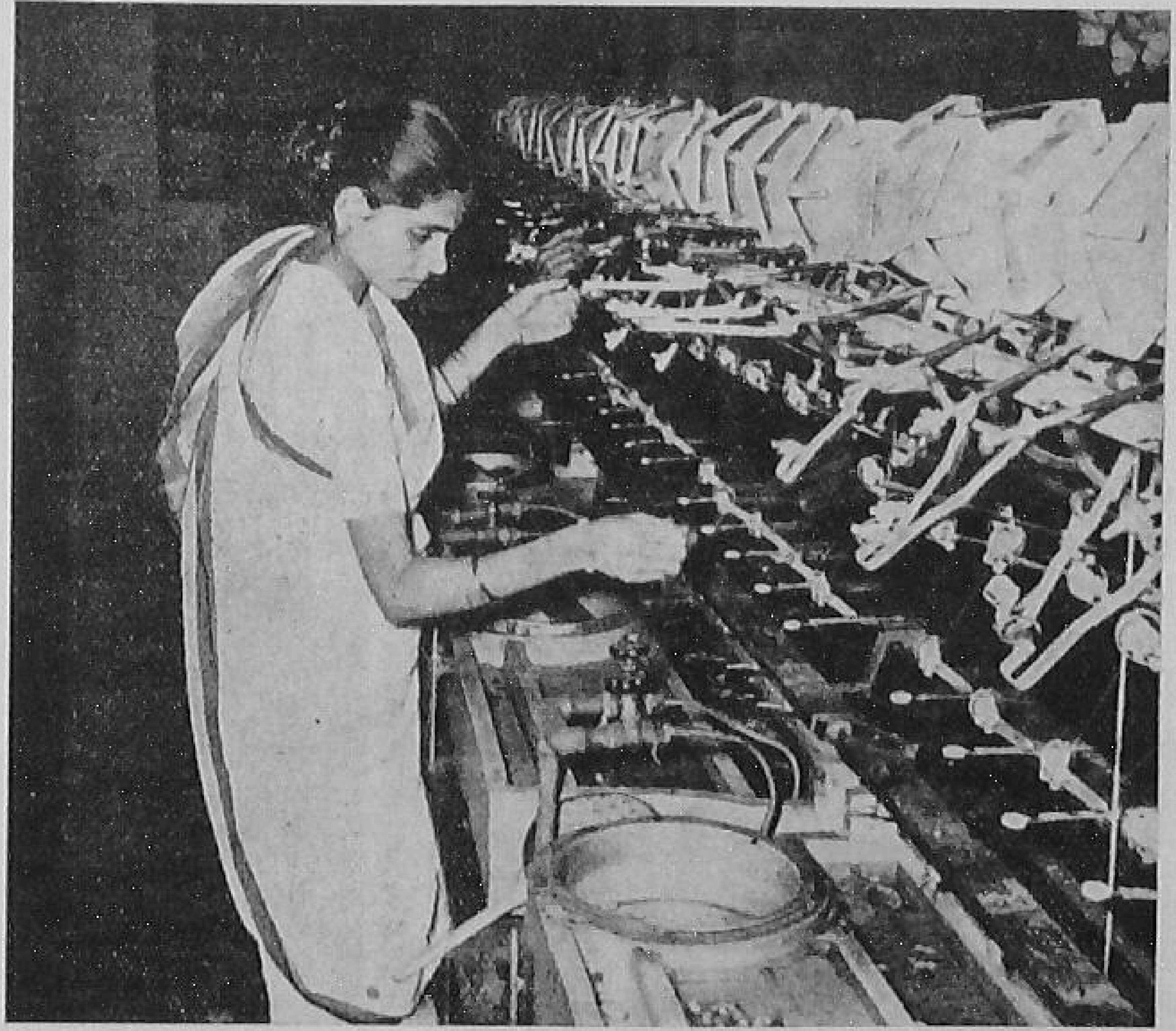

A woman worker busy reeling silk yarn in a co-operative silk reeling factory

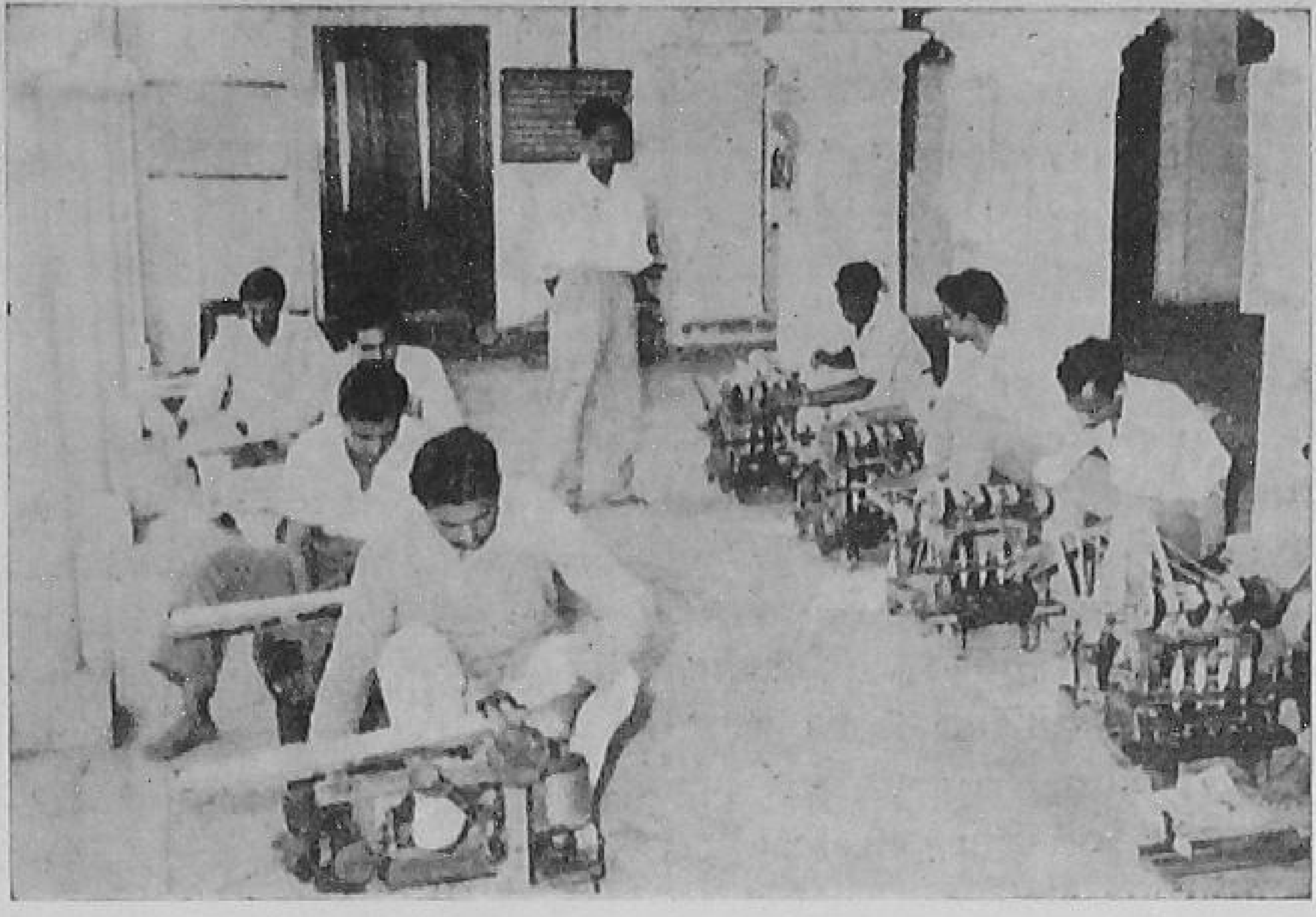

Officer Trainees of the Ambar Charkha class in the Mahavidyalaya Centre, Hyderabad

In short, an intelligent interest in all matters affecting the growth and management of co-operative societies is taken. For organising new societies and spreading the co-operative movement, education of members and non-members in the principles and advantages of co-operation may be undertaken, and ideas of living a more full and useful life through means of co-operative enterprises in the field of farming, business etc., may be inculcated.

A Co-operative Inspector or Supervisor is essentially a field worker. The work of most Co-operative inspectors is located in rural areas, as by far the greater number of co-operative enterprises embrace rural life.

Personal qualities necessary for the job are patience and a calm temperament in dealing with the public and members of co-operatives, friendly and helpful attitude in the supervision and guidance of the work and management of the societies, executive ability for the proper performance of a variety of duties, and a sympathetic and understanding approach in instructing the individual members of societies in the methods and techniques of Co-operation. Good health is also necessary for out-door work and continuous tours.

THE WAY TO QUALIFY: The training of Co-operative supervisors and other subordinate personnel is the responsibility of the State Governments, for which financial assistance is given by the Central Government. Normally, each State is expected to have one institution for training. While some of the bigger States like Madras, Bombay and Uttar Pradesh have more than one institution, some of the Part 'C' States have to send their personnel for training in the neighbouring bigger States. Each institution usually runs two classes of 40 each simultaneously, for a period of six months, so that in a year 160 candidates are trained by one institution. During the period, both practical and theoretical training is given. Usually matriculates are eligible for the training. No fee is charged and stipends are given to the trainees to meet their boarding and lodging expenses during the period of training.

The training institutions are run by the State Governments, primarily for the training of their departmental employees. A few non-departmental candidates with the requisite qualifications are, however, admitted but they are not eligible for stipend and travelling allowance. Personnel deputed by the co-operative departments and institutions are, as a rule, allowed to draw their pay during the period of training. Besides, they are eligible for a monthly stipend up to a maximum of Rs. 40 and travelling allowance for joining the training centre and for tours connected with practical training, up to a maximum of Rs. 60 per candidate. In some States, a few scholarships are also available for deserving cases.

A scheme for the training of Block Level Co-operative officers of the National Extension Service Blocks has, at the instance of the Community Projects Administration, also formulated by the Central Committee for Co-operative

Training. The course, which usually extends over a period of ten months, has been given a distinctly rural developmental bias. These centres are located at Gopalpur-on-sea (Orissa), Hyderabad, Tirupathi (Andhra), Kotah (Rajasthan), Bhavnagar (Bombay), Dhuri (Pepsu), Faizabad (Uttar Pradesh) and Kalyani (West Bengal), and each unit will train about 100 trainees in a year. Nearly 700 to 800 candidates are expected to be trained every year during the Second Plan period. No fees are charged, and each trainee is given a stipend of Rs. 50 per month in addition to free lodging.

The course of studies includes theory, the history and practice of Co-operation, laws pertaining to Co-operation and other laws; banking, auditing, book-keeping and accounting; rural economics, etc. The candidates may also be required to choose some optional subject for special study.

After the lectures, students have to go out on study tours with a view to acquaint themselves with the actual working of Co-operative and allied organisations. The trainees have also to undergo practical training in the subject in which they propose to specialise.

Further training facilities, offered by the Reserve Bank of India, are available for the training of personnel of Co-operative departments and Co-operative institutions at higher and intermediate levels.

The Co-operative Training College Poona, offers six-month short-term training courses for personnel of higher grades such as those of Deputy Registrar, Assistant Registrar, Secretary and Manager of Central and State Co-operative Banks, etc. The courses are open to officials and non-officials deputed by the Co-operative department or institutions. In each course, 35 to 40 candidates are admitted.

For the training of intermediate grade staff five regional training centres, one each at Poona, Madras, Pusa (Bihar), Meerut and Indore are also being set up. The first three are already functioning while the others are to be started soon. Orinarily graduates, (preferably in economics, commerce or agriculture) holding a position above the subordinate personnel but below the higher category in the Co-operative departments or institutions, are eligible for admission. Each of these centres admits 40 to 45 candidates in one session. Usually, employees of Co-operative departments and institutions are admitted, though a few non-departmental candidates are also admitted, if vacancies exist, on the recommendation of the Registrar of Co-operative Societies of the State concerned and on the understanding that the candidate would serve a Co-operative institution or department for at least five subsequent years. They are not, however, eligible for any stipend and other concessions usually available to the employees of Co-operative departments|institutions.

The duration of the course is eleven months, including 4½ months of practical training,

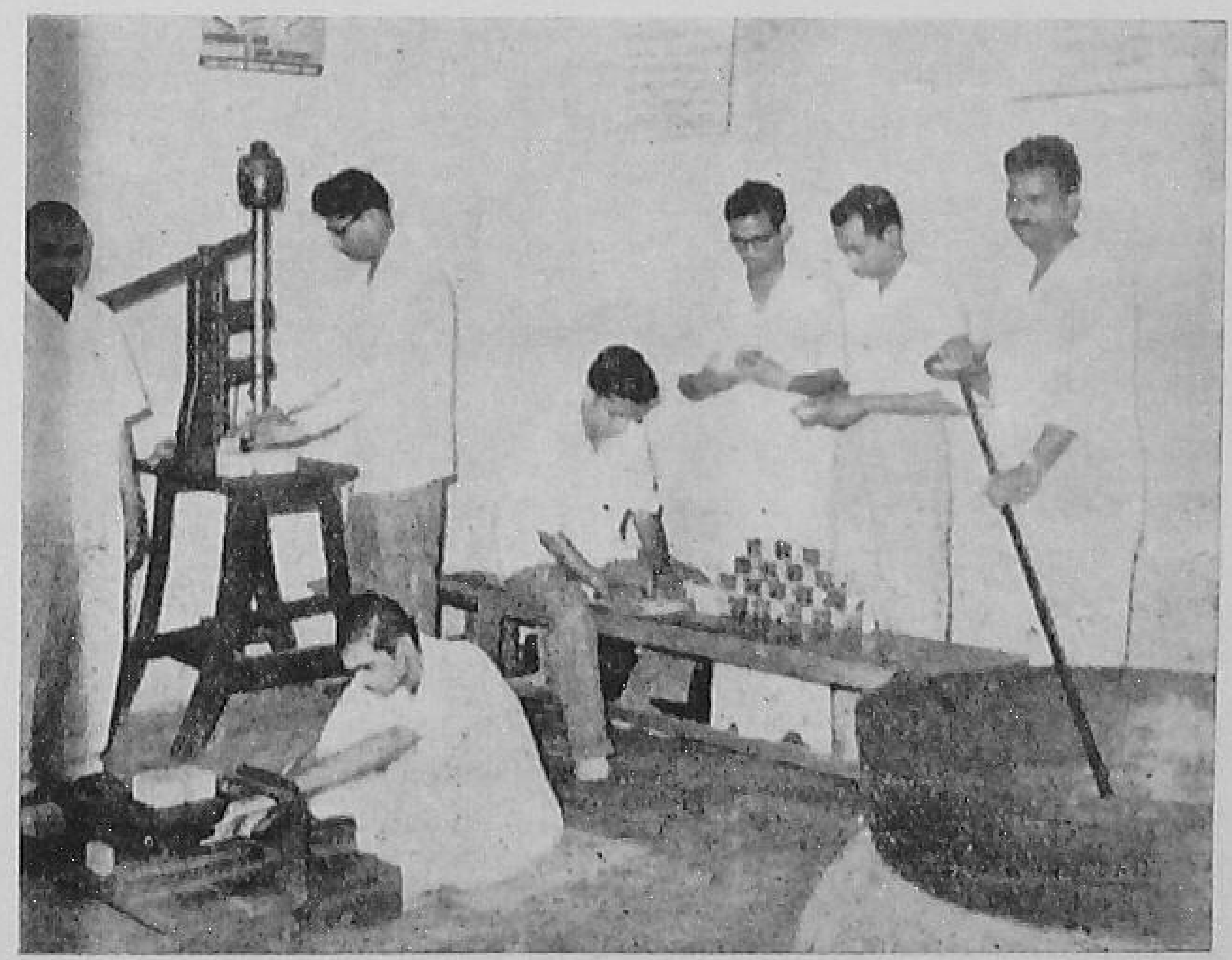

They learn the art of soap making in the Mahavidyalaya Centre at Hyderabad

except in Poona where the period of training is 12 months including 2 months' practical training. No tuition fee is charged, and rent-free lodging is provided at the training centre. To all the employees of the co-operative departments or institution monthly stipend of Rs. 50|-, while at the training centre, and Rs. 120|- per month, while on study tour, is paid.

Specialised training is provided in banking, Co-operative administration, agricultural marketing, industrial co-operation including cottage, small-scale and village industries, advanced accountancy, and land mortgage banking.

Openings for employment exist in the Co-operative department or Co-operative societies and institutions. Employment is available in all sectors of the co-operative movement.

Entry into the profession of Co-operative personnel, at subordinate level, is through Registrars of Co-operative Societies, the Co-operative Unions or the central financing agencies of the States concerned.

State Public Service Commissions, Sub-ordinate Services Selection Boards or specially constituted selection committees, may also select candidates. For appointment in the National Extension Service Organisation, candidates have to apply to the Development Commissioners of their States.

Prospects for advancement to the posts of auditors, Assistant Registrars, and Deputy Registrars of Co-operative societies are quite bright.

Though in many of the States, Co-operative Departments are of recent origin, their development and expansion is assured under the Second Five-Year Plan. It is, therefore, expected, that persons joining these departments will find steady chances of promotion.

Salaries vary from place to place, but inspectors usually start on a pay ranging from Rs. 60 to Rs. 150 per month in addition to dearness and other allowances.

EMPLOYMENT OUTLOOK

The Co-operative movement in India is not very old, and its past achievements and the policy of Government promise healthy growth in the future. By December 1954, slightly over 20 percent of the total population of India had been brought under this movement embracing a membership of 15.2 million persons with a working capital of Rs. 352 crores.

Hitherto, co-operative activity in the country has been mainly confined to giving credit facilities. The Government of India are planning to reorientate and expand the Co-operative movement to cover all aspects of economic activity, such as marketing, warehousing, and processing. Besides small societies, it is proposed to organise, by 1960-61, about 12,000 large-sized Co-operative societies, each serving about ten villages. The target is that about one-third of India should be covered, either by strengthening the existing societies or by forming new societies in which the Government would be active participants. For various development schemes a large number of technical and administrative staff will be needed at the rate of roughly one supervisor (or inspector) for every fifteen large-sized societies or every 25 ordinary societies (catering for one or two small villages), an auditor for every 20 large-sized societies or for every 45 ordinary societies, and two Assistant Registrars and one Deputy Registrar for each district. The Co-operative Organization will also be called upon to play its part in reorganising the social and economic life of the rural areas, through the National Extension Service. For the phased programme of rural development alone, it is estimated that nearly 4,000 Co-operative inspectors will be required by the State Governments under the Second Five Year Plan.

For further information on training facilities, employment availability etc., you may contact :

(i) The Registrar of Co-operative Societies of your State.

(ii) The State Co-operative Union of your State.

(iii) The Development Commissioner of your State.

(iv) The Principals or Managers of State Training Institutions.

(v) The Employment Exchange serving your area.

The United Nations Day was celebrated on October 24. This United Nations photograph shows the headquarters of the United Nations in New York. The skyscraper facing the river houses the U.N. Secretariat offices.

A view of the Silos at Hapur.

Printed by the Production Officer, United Press, Delhi-8, and Published by the Director, Publications Division, Ministry of Information and Broadcasting, Delhi—8, on behalf of the Ministry of Community Development.

Regd. D—877